ZigBee Knob Smart Dimmer

09.ZG2835RAC.04736

Important: *Read All Instructions Prior to Installation*

Function introduction

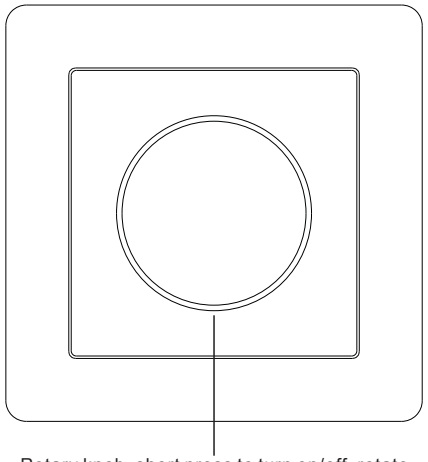

Rotary knob, short press to turn on/off, rotate clockwise to increase brightness, rotate counterclockwise to decrease brightness

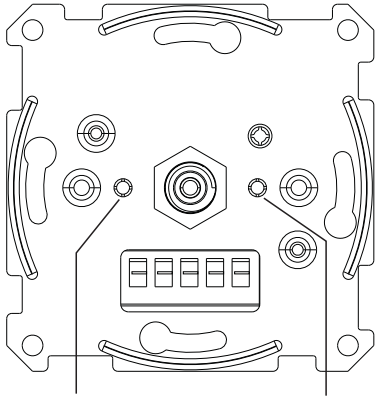

"Min. Set" Key: for minimum brightness and startup brightness setting

"Reset" Key: for zigbee network pairing, touchlink or factory reset the device

Front side

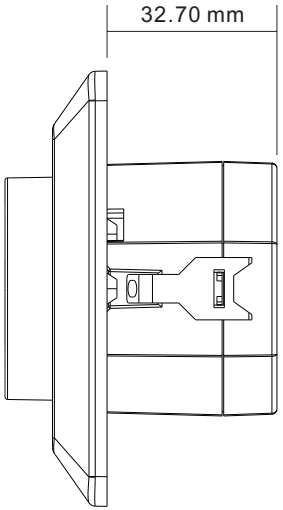

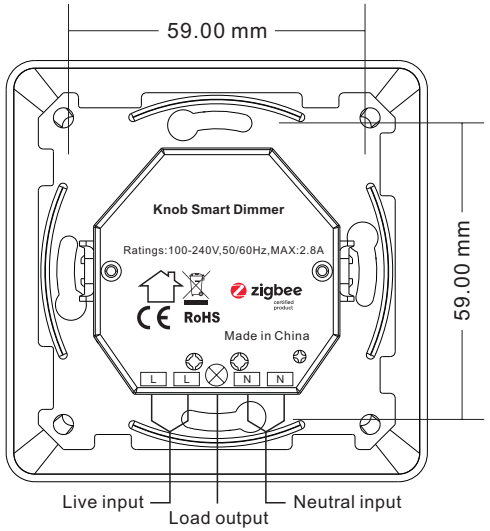

Back side

Product Data

Input Voltage	Output Voltage	Output Current	Size(LxWxH)
100-240VAC	100-240VAC	2.8A max	83.8x83.8x52.4mm

Compatible Load Types			
Load Symbol	Load Type	Maximum Load	Remarks
	Dimmable LED lamps	300W @ 230V 150W @ 110V	Due to variety of LED lamp designs, maximum number of LED lamps is further dependent on power factor result when connected to dimmer.
	Dimmable LED drivers	300W @ 230V 150W @ 110V	Maximum permitted number of drivers is 300W divided by driver nameplate power rating.
	Incandescent lighting, HV Halogen lamps	600W @ 230V 300W @ 110V	
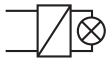	Low voltage halogen lighting with electronic transformers	300W @ 230V 150W @ 110V	

ZigBee Clusters the device supports are as follows:

Input Clusters

• 0x0000: Basic • 0x0003: Identify • 0x0004: Groups • 0x0005: Scenes • 0x0006: On/off

• 0x0702: Simple Metering • 0x0008: Level Control • 0x0b04: Electrical Measurement • 0x0b05: Diagnostics

Output Clusters

• 0x0019: OTA

- ZigBee knob smart dimmer based on latest ZigBee 3.0 protocol
- 100-240VAC wide input and output voltage, can work under no neutral wiring and with neutral wiring, self-adaptive
- Supports resistive loads, capacitive loads or inductive loads
- 1 channel output, up to 600W
- Both leading edge version and trailing edge versions are available for choosing, preset by factory setting
- Enables to control ON/OFF and light intensity of connected light source
- ZigBee end device that supports Touchlink commissioning
- Can be controlled by zigbee gateway, zigbee remote and local rotary knob
- Can directly pair to a compatible ZigBee remote via Touchlink without coordinator
- Supports self-forming zigbee network without coordinator and add other devices to the network
- Supports find and bind mode to bind a ZigBee remote
- Supports zigbee green power and can bind max. 20 zigbee green power remotes
- Compatible with universal ZigBee gateway products
- Standard size, can be compatible with existing EU standard frames, and installed into standard size wall box
- Radio Frequency : 2.4GHz
- Waterproof grade: IP20

Main Features:

- Can operate under two-wire connection with no neutral lead or three-wire connection with neutral lead
- Advanced microprocessor control
- Implemented algorithm of smart light source detection
- Active power and energy metering functionality
- Soft start function
- Innovative minimum dimming level and startup brightness setting functions
- The Bypass is an extension unit

As a dimmer it operates under the following loads:

- Conventional incandescent and HV halogen light sources
- ELV halogen lamps and dimmable LED bulbs (with electronic transformers)
- MLV halogen lamps (with ferromagnetic transformers)
- Dimmable LED bulbs
- Dimmable compact fluorescent CFL tube lamps
- Supported dimmable light sources (power factor > 0.5) with minimal power of 3VA using the Bypass (depending on the type of load)

Trailing edge or leading edge dimming mode can be preset by factory setting to control following types of loads:

- "Trailing edge" for resistive loads
- "Trailing edge" for capacitive loads
- "Leading edge" for inductive loads

Note: factory default version is trailing edge.

Safety & Warnings

- DO NOT install with power applied to device.
- DO NOT expose the device to moisture.

Operation

1.Do wiring according to connection diagram correctly.

2.This ZigBee device is a wireless receiver that communicates with a variety of ZigBee compatible systems. This receiver receives and is controlled by wireless radio signals from the compatible ZigBee system.

3. Zigbee Network Pairing through Coordinator or Hub (Added to a Zigbee Network)

Step 1: Remove the device from previous zigbee network if it has already been added to, otherwise pairing will fail. Please refer to the part "**Factory Reset Manually**".

Step 2: From your ZigBee Controller or hub interface, choose to add lighting device and enter Pairing mode as instructed by the controller.

Step 4: Connected light will blink 5 times and then stay solid on, then the device will appear in your controller's menu and can be controlled through controller or hub interface.

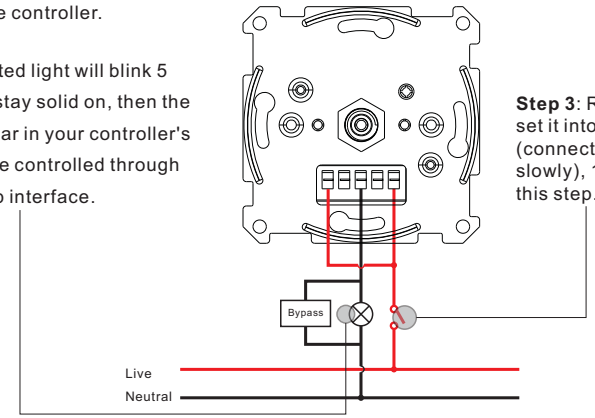

Step 3: Reset power of the device to set it into network pairing mode (connected light flashes twice slowly), 15 seconds timeout, repeat this step.

4. TouchLink to a Zigbee Remote

Step 1: Method 1: Short press "Reset" button 4 times (or reset power of the device 4 times) to start Touchlink commissioning immediately under any circumstances, 180S timeout, repeat this step.
Method 2: Reset power of the device, Touchlink commissioning will start after 15S if it's not added to a zigbee network, 165S timeout. Or start immediately if it's already added to a network, 180S timeout. Once timeout, repeat this step.

Step 2: Bring the remote or touch panel within 10cm of the lighting device.

Step 3: Set the remote or touch panel into Touchlink commissioning, please refer to corresponding remote or touch panel manual to learn how.

Step 4: There shall be indication on the remote for successful link and connected light will flash twice.

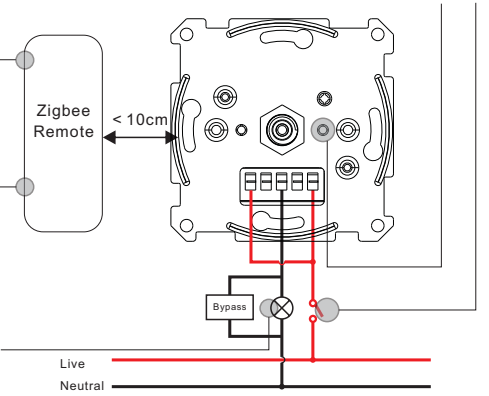

Note: 1) Directly TouchLink (both not added to a ZigBee network), each device can link with 1 remote.
2) TouchLink after both added to a ZigBee network, each device can link with max. 30 remotes.
3) Control with both gateway and remote, add remote and device to network first then TouchLink.
4) After TouchLink, the device can be controlled by the linked remotes.

5. Removed from a Zigbee Network through Coordinator or Hub Interface

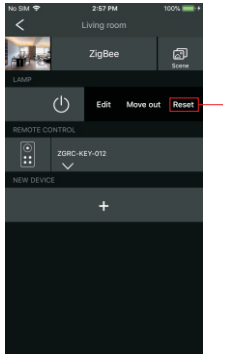

From your ZigBee controller or hub interface, choose to delete or reset the lighting device as instructed. The connected light blinks 3 times to indicate successful reset.

6. Factory Reset Manually

Note: 1) If the device is already at factory default setting, there is no indication when factory reset again .

2) All configuration parameters will be reset after the device is reset or removed from the network.

Step 2: Connected light will blink 3 times to indicate successful reset.

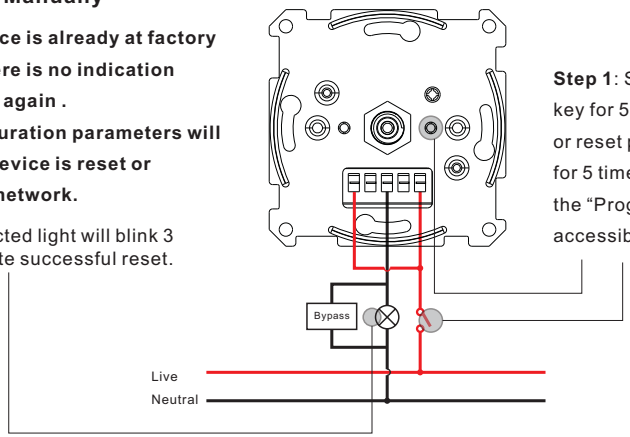

Step 1: Short press "Reset." key for 5 times continuously or reset power of the device for 5 times continuously if the "Prog." key is not accessible.

7. Factory Reset through a Zigbee Remote (Touch Reset)

Note: Make sure the device already added to a network, the remote added to the same one or not added to any network.

Step 2: Bring the remote or touch panel within 10cm of the lighting device.

Step 3: SSet the remote or touch panel into Touch Reset procedure to reset the device, please refer to corresponding remote or touch panel manual to learn how.

Step 4: There shall be indication on the remote and connected light flashes 3 times for successful reset.

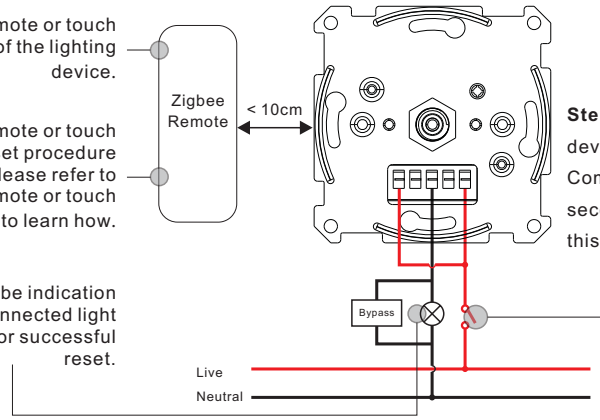

Step 1: Reset power of the device to start TouchLink Commissioning, 180 seconds timeout, repeat this step.

8. Find and Bind Mode

Note: Make sure the device and remote already added to the same zigbee network.

Step 2: Set the remote or touch panel (target node) into find and bind mode, and enable it to find and bind initiator, please refer to corresponding remote or touch panel manual.

Step 3: There shall be indication on the remote or touch panel that it bind the device successfully and can control it then.

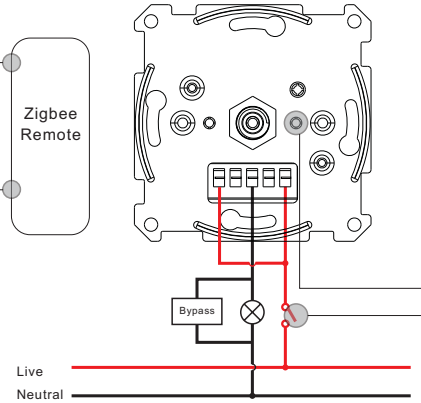

Step 1: Short press “Reset.” button 3 times (Or reset power of the device (initiator node) 3 times) to start Find and Bind mode (connected light flashes slowly) to find and bind target node, 180 seconds timeout, repeat this step.

9. Learning to a Zigbee Green Power Remote

Step 2: Set the green power remote into Learning mode, please refer to its manual.

Step 3: Connected light will flash twice to indicate successful learning. Then the remote can control the device.

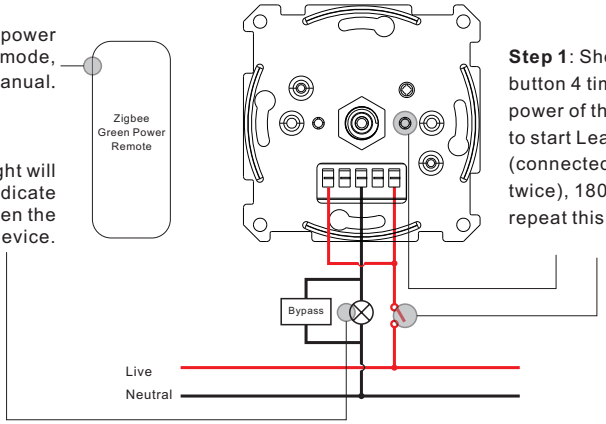

Step 1: Short press “Reset.” button 4 times (Or reset power of the device 4 times) to start Learning mode (connected light flashes twice), 180 seconds timeout, repeat this step.

Note: Each device can learn to max. 20 zigbee green power remotes.

10. Delete Learning to a Zigbee Green Power Remote

Step 2: Set the paired green power remote into Learning mode, please refer to its manual.

Step 3: Connected light will flash 4 times to indicate successful deleting.

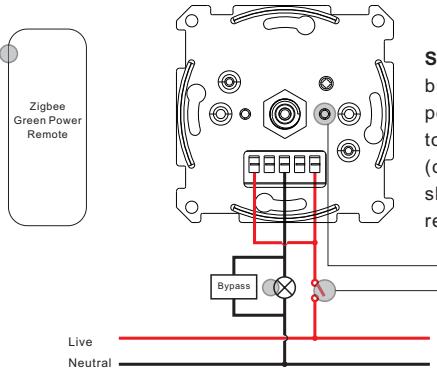

Step 1: Short press “Reset.” button 3 times (Or reset power of the device 3 times) to start delete Learning mode (connected light flashes slowly), 180 seconds timeout, repeat this step.

11. Setup a Zigbee Network & Add Other Devices to the Network (No Coordinator Required)

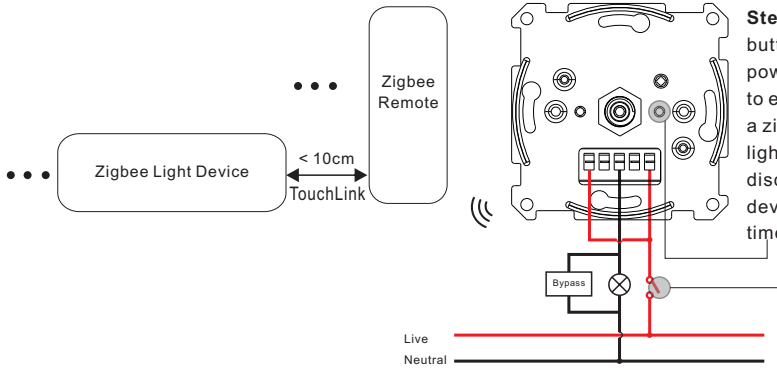

Step 1: Short press “Reset.” button 4 times (Or reset power of the device 4 times) to enable the device to setup a zigbee network (connected light flashes twice) to discover and add other devices, 180 seconds timeout, repeat this step.

Step 2: Set another device or remote or touch panel into network pairing mode and pair to the network, refer to their manuals.
Step 3: Pair more devices and remotes to the network as you would like, refer to their manuals.
Step 4: Bind the added devices and remotes through Touchlink so that the devices can be controlled by the remotes, refer to their manuals.

Note: 1) Each added device can link and be controlled by max. 30 added remotes.
2) Each added remote can link and control max. 30 added devices.

12. OTA

The device supports firmware updating through OTA, and will acquire new firmware from zigbee controller or hub every 10 minutes automatically.

13. Minimum and Startup Brightness Setting Button

Press and hold down the button for 3 seconds to set minimum brightness: when current brightness value is 1%-50%, it will be set as minimum brightness. When current brightness value is 100%, previously set minimum brightness will be deleted. Once a minimum brightness is set, the connected load can not be dimmed below this level.

Short press the button twice to set startup brightness: when current brightness value is 1%-50%, it will be set as startup brightness. When current brightness value is 0%, previously set startup brightness will be deleted.
Note: startup brightness setting function is to avoid the phenomenon that some dimmable LED drivers can not be turned on after dimmed to a low level and turned off. Once setting a startup brightness, if the startup brightness is higher than dimmed level before turned off, the driver will first go to the startup brightness after turned on then drop down to the dimmed level. If the startup brightness is lower than the dimmed level before tured off, the driver will directly go to the dimmed level after turned on.

Wiring Diagram

Notes for the diagrams:

L - terminal for live lead

N - terminal for neutral lead

⊗ - output terminal of the dimmer (controlling connected light source)

Compatible load types and recommended values of power for supported loads:

	Supported load types	100-240V~	
	Resistive loads Conventional incandescent and halogen light sources	20-600W @ 230V 20-300W @ 110V	
	Capacitive loads Fluorescent tube lamp (compact / with electronic ballast), electronic transformer, LED	Using Bypass: 3-300W @ 230V 3-150W @ 110V	No Bypass Used: 20-300W @ 230V 20-150W @ 110V
	Inductive loads Ferromagnetic transformers	20-300W @ 230V 20-150W @ 110V	

This phase dimmer adopts leading edge dimming (forward phase control) or trailing edge dimming (reverse phase control), two versions are available for choosing, factory default version is trailing edge. Please make sure the connected loads support the control type you choose. Please refer to the user manual of the load or consult the supplier of the load.

(1) 2-Wire Connection With No Neutral Lead

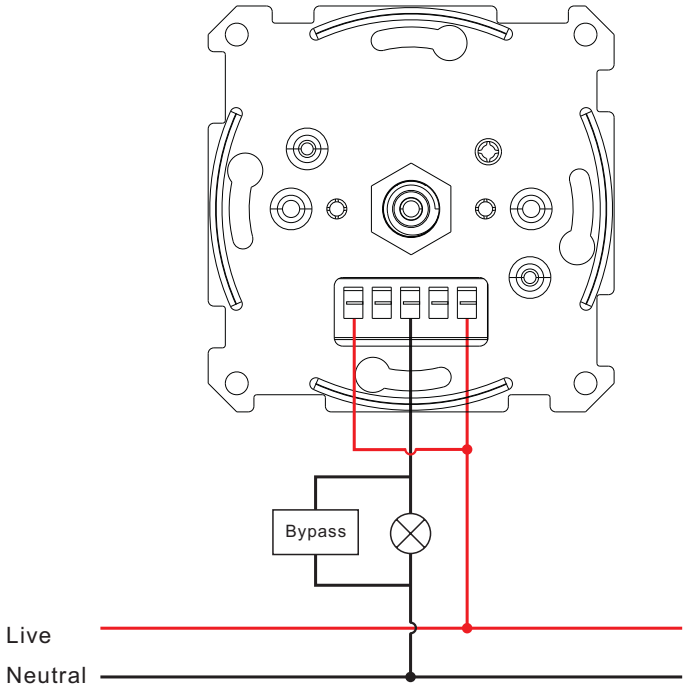

The Bypass is a device designed to work with the knob smart dimmer. It should be used in case of connecting LED bulbs or energy saving compact fluorescent lamps. The Bypass prevents flickering of the LED lights and glowing of the turned off compact fluorescent lamps. In the case of 2-wire connection, the Bypass allows to reduce minimum power of load required by the dimmer for correct operation. The Bypass provides powering of the dimmer in case of controlling the low loads of minimum power down to 3W (for cosφ>0.5).

(2) 3-Wire Connection With Neutral Lead

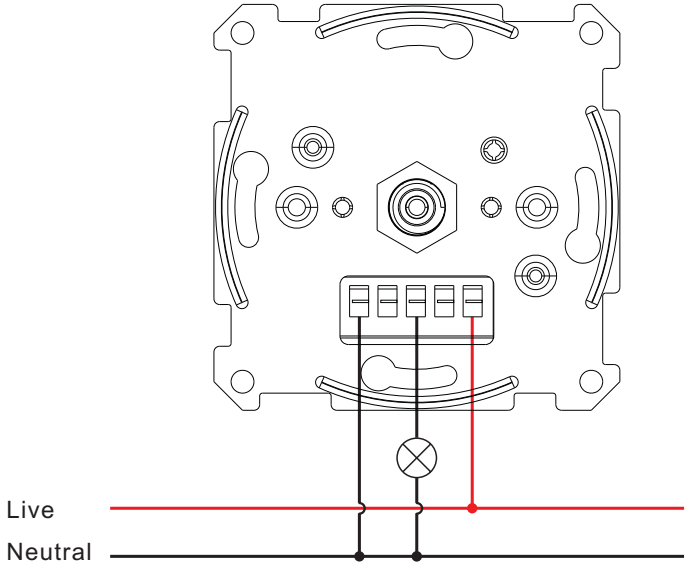
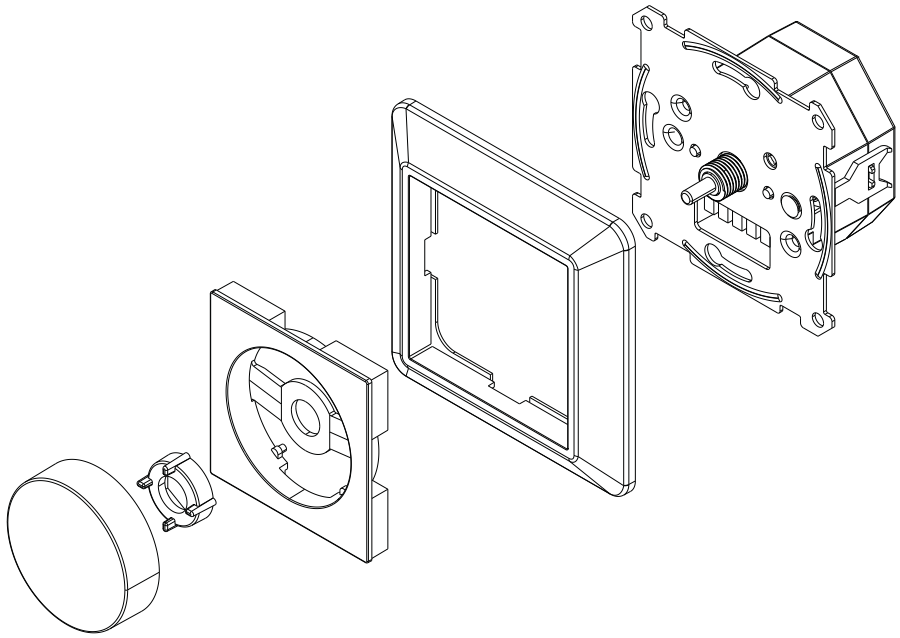
Installation